FRP TROUGH SYSTEMS

FRP TROUGH SYSTEMS

BENEFITS

- Rugged laminate with 24 oz woven roving throughout
- 30% stronger for longer lengths
- Integrally molded lateral stiffening flanges

FEATURES

- Internal reinforcement in critical areas
- Flange-by-flange or slip joint connections
- FRP, HDG or stainless steel brackets
- Available in ISO, VE, NSF61
- Parshall Flumes

NEFCO™

THE CLEAR DIFFERENCE.

30% STRONGER FIBERGLASS TROUGHS FOR NEW AND RETROFIT APPLICATIONS

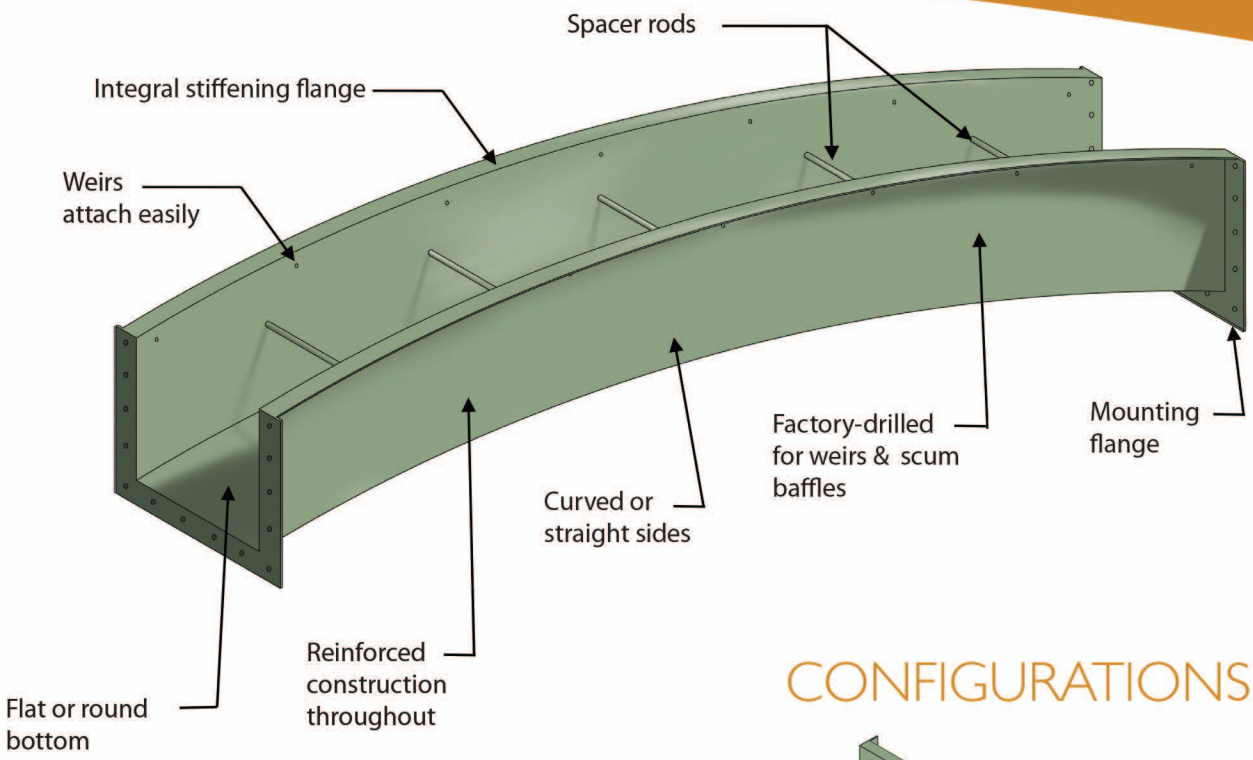

PROPERTY	TEST	MINIMUM VALUE
Tensile Strength	ASTM D-638	25,000 psi
Flexural Strength	ASTM D-790	34,000 psi
Flexural Modulus	ASTM D-790	1.48×10^6 psi
Barcol Hardness	ASTM D-2853	40
Notched Izod	ASTM D-256	20 ft-lbs/in
Water Absorption	ASTM D-570	0.1%

THE BASICS

- Complete effluent trough systems
- Corrosion & UV resistant materials
- Flange-by-flange design
- Stainless steel hardware
- Wash, UV, filter troughs
- Easily retrofitted to existing systems
- Supplied with trough support systems

CONFIGURATIONS

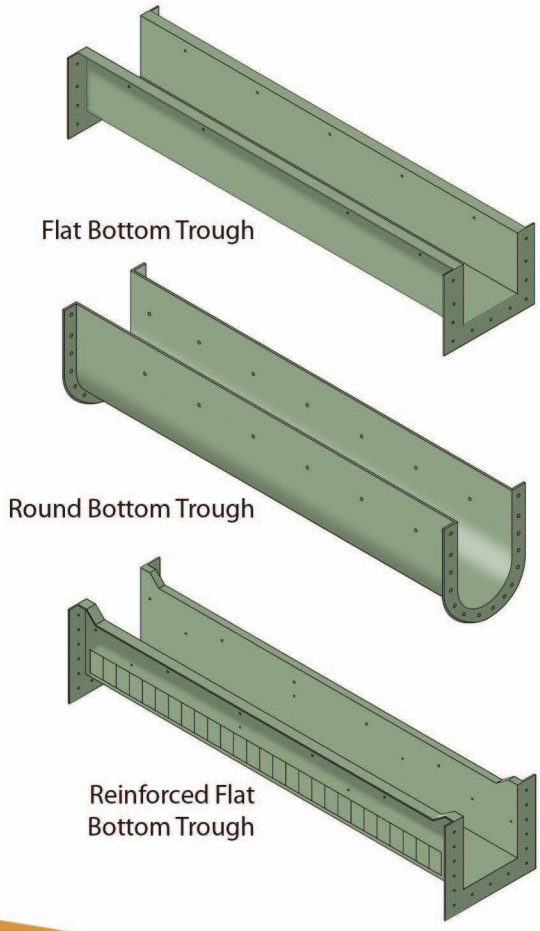

For more information visit our web site www.nefco.us

NEFCO™

NEFCO Systems, Inc.
8895 N Military Trail, Suite 100C
Palm Beach Gardens, FL 33410
(561) 775-9303

2019